A 3D PRINTED HYBRID VERSION OF JOHN MORAN'S FOUR FACET DRILL SHARPENER

Introduction

While investigating four facet drill sharpening, I came across John Moran's website which detailed his design for a four facet drill sharpener. Four facet sharpening is popular for providing more accurate starting of a hole, less drilling pressure, more accurate hole size and better retention of drill point sharpness. John's design is intended for sharpening 2mm to 12mm drill bits.

I have a Quorn grinder but it is not something that I can quickly pull out from under the bench to sharpen the odd drill. John's design looked easy to set up and use and certainly easier to carry. I recommend that you read his write up before considering embarking on duplicating his design either as John describes or my 3D printed hybrid version.

https://gadgetbuilder.com/DrillSharp.html#Facet4

In addition to his website details, John has published construction notes. These when read in conjunction with his website give a well documented write up. His design notes give drawings of the key parts. Here is a picture by John of his finished sharpener. It is quite impressive. What most surprised me on building it was how small the whole assembly was.

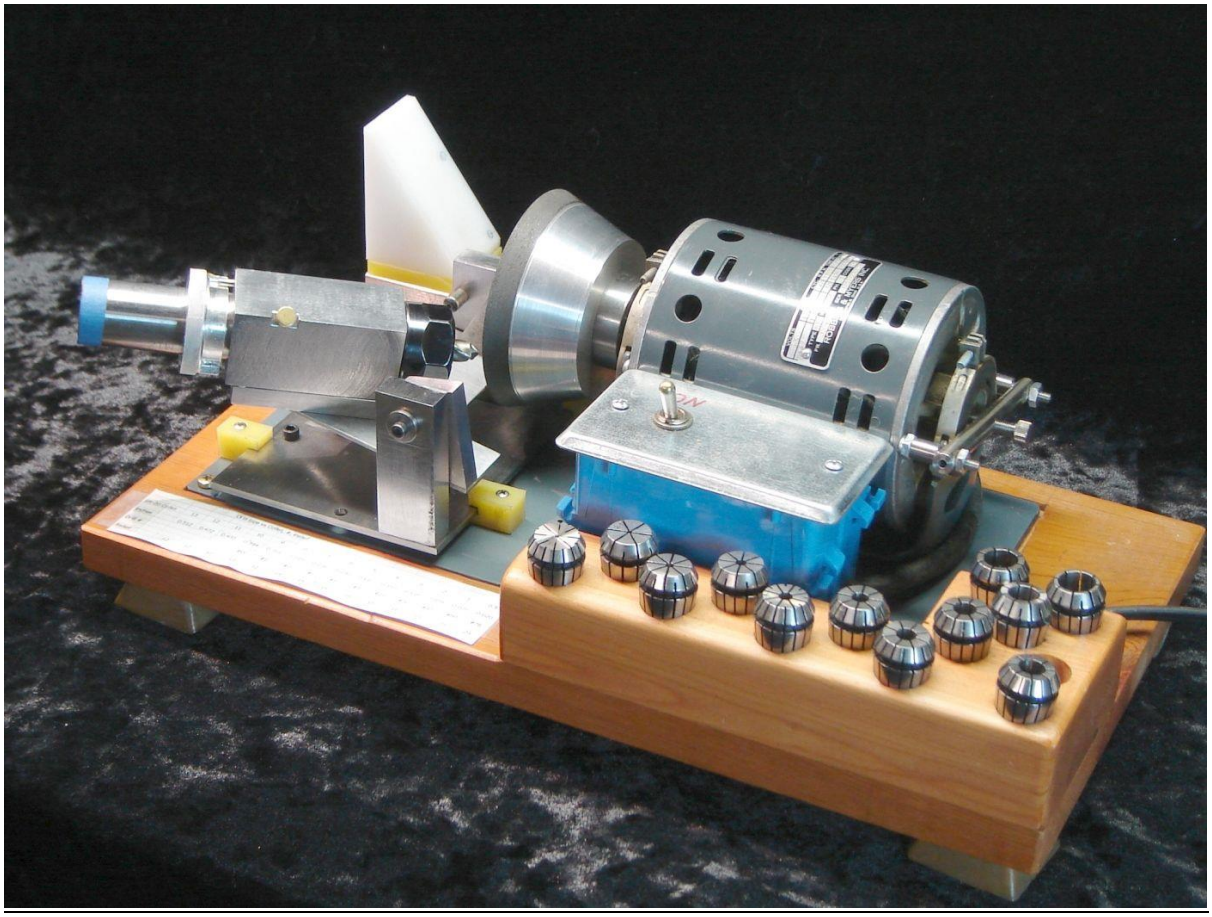

This write up is not intended as a step by step description of how to make John's design. His documentation does this admirably well. My write up is meant more as an example of how the hybrid combination of 3D printing and conventional engineering techniques can greatly ease and facilitate the construction of what might at first glance be a complex project. If this hybrid approach gives confidence to more home engineers to think of other ways to 'skin the cat' then it can only be good for the hobby.

Background

I spent some time reading John's notes and drawings but was reluctant to dive in and cut metal until I better understood the concept. Fusion 360 was my first port of call and I began to model the design. By modelling the design in conjunction with John's notes it was very useful in helping me understand what was involved.

My lazy man's thinking then took over and I decided that having produced the Fusion 360 3D model it would be very easy to produce the key components as 3D prints. This would allow me to quickly build the grinder. My thinking was that once I had the design up and running I would replace the PLA printed parts with metal equivalents. The only slight worry I had was whether my hybrid approach would be robust and stable enough. Most important would be whether it would produce good grinding results. In practice, in the period I have been using it, this has not been a problem. Perhaps longer term the PLA will degrade and impact on the design repeatability but only time will tell.

Here is a part identifying screenshot from my Fusion 360 model.

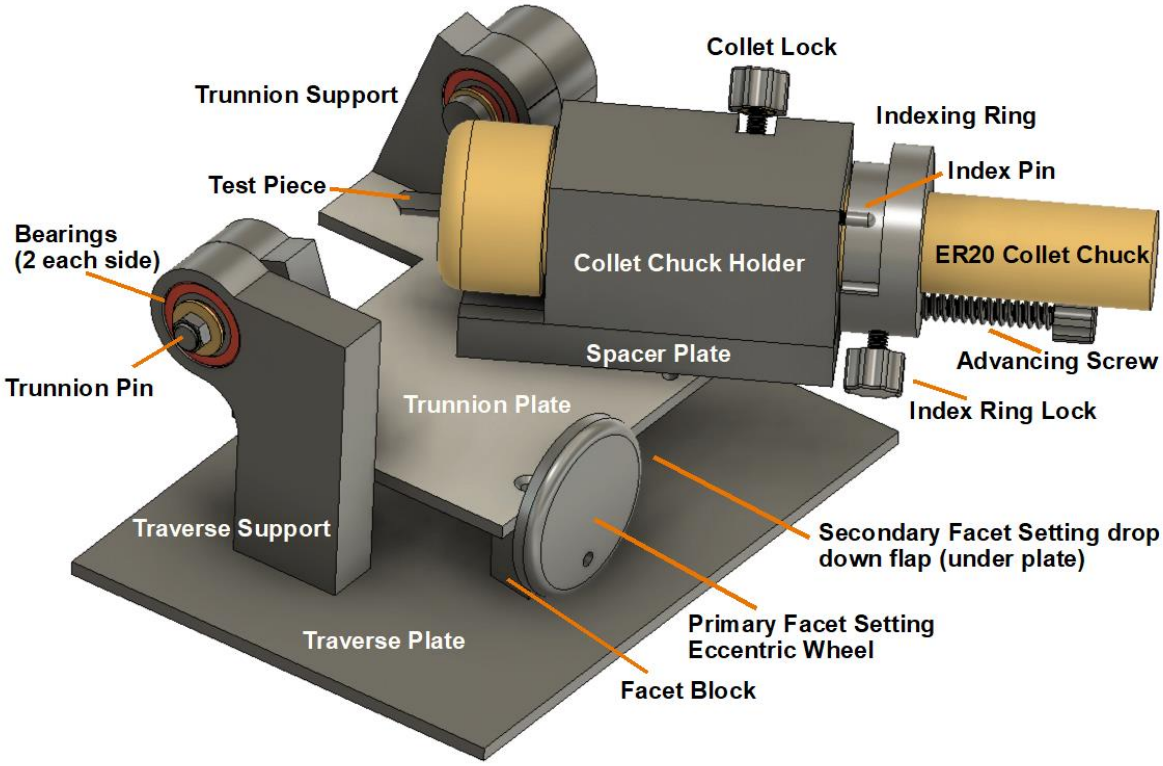

General Description

The design has a number of key components which are detailed above. These are the collet chuck, collet chuck holder, spacer plate, indexing ring, trunnion mounted plate, trunnion supports, traversing baseplate and facet angle setting components.

The drill being sharpened is gripped in an off the shelf collet chuck. John's design uses an ER20 size with a 100mm long, 20mm diameter shank. Note that John mentions in his notes that the internal diameter of most ER20 collet chucks will need boring out in order to accommodate drill sizes above 8.5mm. As collet chucks are made from hardened steel, a Cobalt drill or similar will be needed for this operation.

The shank of the collet chuck sits inside a holding block. This allows the chuck to be rotated and moved back and forth. This alters the protrusion of the drill being gripped for sharpening. There is a collet lock grub screw to lock the shank in the required position.

An indexing/infeed ring sits on the back end of the chuck shank. This defines the 180 degree step rotation needed to grind each flute of the drill. This ring also has an advancing screw that controls the infeed of the chuck against the grinding wheel. The associated register stop pin is mounted on the rear of the collet holder block. The ring, like the collet has a grub screw lock. I allowed for two grub screw threaded holes in the collar model.

The collet holding block is mounted on a spacer block. This block allows the height of the collet chuck centre line to be tweaked such that its centre line coincides with the centre line of the trunnion plate rotational axis.

The spacer block has four mounting screws to fasten it to the chuck holder. It also has two locating pins on its base. These match and mate with holes in the trunnion plate for setting 60, 118 and 135 degree drill point angles. The trunnion plate is hinged on two trunnion pin supports that allow the plate to angle up and down to set the facet grinding angles. I opted for 6mm diameter for the trunnion pins. The primary facet angle is adjustable with an eccentric mounted wheel that bears against the baseplate. The secondary angle is fixed and is dependent on the length of a drop-down triangular paddle which in use also rests on the baseplate. Both these setting devices mount on a block under the trunnion plate.

The complete trunnion plate and collet block assembly sit on a baseplate traversing table. This is slid back and forth to pass the drill bit across the grinding wheel face. A cup wheel is used for grinding. The sliding action of the base is supported by four very simple slotted slide mounts in conjunction with a lever mechanism. Providing the traverse baseplate has parallel sides the movement of the whole assembly across the grinding wheel face is a smooth back and forth process. John also adds a pressure bearing against the traverse plate front edge to ensure firm pressure against the grinding surface.

Setup is quite critical and John describes various test pieces to help with this and an associated process that needs to be followed. Prime consideration is given to the necessary parallel motion.

John's design was drawn in Imperial dimensions. I opted to convert and adjust some of the dimensions to metric to suit my available stock of material and fasteners.

3D Prints

Having drawn the design in Fusion I produced the following 3D prints : -

collet chuck holder block
collet chuck indexing ring
collet chuck block spacer
left and right trunnion supports (2)
left traverse support arm
right traverse support arm
facet angle block mount
primary facet setting disc
secondary facet setting triangular spacer
baseplate slide bearings (4)
slide mechanism knob
adjuster screw knobs (4)

I used PLA for all the printed components. Prior thought is needed regarding print orientation on the print bed to avoid print distortions. Very little supporting material had to be printed. The longest time to print on my Sindoh 3DWOX was the collet chuck holder at around 2 hours.

All tapped holes were fully modelled in Fusion and then after the component was printed the threads were cleaned with an appropriate tap.

I had some 19mm OD, 6mm bore ball races to hand which I modelled into the table supports. The ID of these matched the 6mm diameter of the trunnion pins and also the test rod needed for setting up. The diameter of these bearings led to some 'power bulges' on the supports.

The 20mm bore in the collet holder block is critical for a smooth sliding movement of the collet chuck shank. I made a couple of trial versions of the collet block before I got the tolerance I needed. Because of the printing process it might be necessary to 'semi ream' the finish of the bore using the flutes of a 20mm drill bit. The result is a tight but useable fit. The register collar did not seem so fussy in this respect.

Metal Components

With the 3D printed components completed, the following metalwork components were needed : -

traverse table baseplate
trunnion plate
trunnion pins
slide lever mechanism
eccentric mount for the pressure bearing
test rods
registration pins

The advantage of Fusion modelling the design meant I had 2D 1:1 PDF drawings of the traverse plate and trunnion table plate. I made these two plates from 3mm aluminium. These were quickly and accurately fabricated by sticking the 1:1 drawings onto the metal stock and then using an optical centre punch to accurately mark the required hole positions.

I need to emphasise that my dimensions in the 3D model and 2D drawings assume no washer spacing between the trunnion supports and traverse table mounts. This will be a variable that you need to factor into your dimensions based on your choice of washer material and dimensions. I used some 1mm thick 6mm bore nylon washers. The critical dimension is shown on the PDF drawing.

As John states in his write up, the sliding baseplate must have parallel sides if the sliding action is to work smoothly. I milled the edges to ensure this. Equally important are the supporting arms for the trunnion plate which must be axially aligned if the hinge action is to work as planned. The axial line of the supports must also be parallel to the edge of the traversing plate. This can be checked using the long test rod (see drawing).

The trunnion pins are two turned 6mm diameter pins with a disc head and a partial thread. The pins are tightened in place with Nyloc retaining nuts and washers.

Test Pieces

John is quite thorough in his set up process and details two test pieces to be made from silver steel (drill) rod. These require accurate machining to give sections that are exactly half diameter. (see drawing). Machining the half diameter is best done on a milling machine. A Stephenson collet block is an ideal asset for this operation. If your grinding wheel cone does not have a 90mm diameter mouth you will need to adjust the centre-to-centre distance of the half diameter sections.

Setup and Testing

Before commencing setup you need to make sure the motor and grinding cone centre line is roughly at the correct height to match the axial centre line of the trunnion pins. This can be checked against the long test rod. Adjust either the height of the motor or your intended mounting height of the traverse table to suit.

The first setup is the placement of the supporting arms on the trunnion plate and the traverse plate. If your construction matches mine in every way then you can repeat my process of gluing the 1:1 drawing of the various holes onto the two plates and spotting through the hole centres with an optical centre punch. If you have the facility, you can CNC drill these holes. Note again that the dimensions on the drawings do not allow for any washer thickness between the support mounts and the trunnion brackets – you must adjust the traverse support spacing holes accordingly.

John emphasises the need to ensure a parallel sliding action of the traverse plate relative to the grinding wheel surface. As mentioned earlier this will depend entirely on how parallel the traverse plate sides are. During set up I rigidly mounted the two traverse slide bearings nearest the grind wheel and then adjusted the front ones to get the best slide action while retaining some resistance. I then added the front edge thrust bearing on its eccentric mount. The right hand front slide bearing can be positioned on the baseboard to act as a slide stop against the right hand traverse support post. The slide movement arm can act as the left hand stop. These stops ensure the supports cannot crash into the grind wheel.

The 6" long test rod that John mentions has two machined flats to half diameter. The distance between these two flats relates to the diameter of the grinding cone. The rod is slid into the trunnion hinge mounts only for set up and is subsequently replaced with the trunnion pins. The end of the rod having the flat section slides in first and protrudes from the left hand support. Once in position the test rod is rotated so that the half diameter sections are vertical and facing the grind wheel faces. See the Fusion created graphic image below.

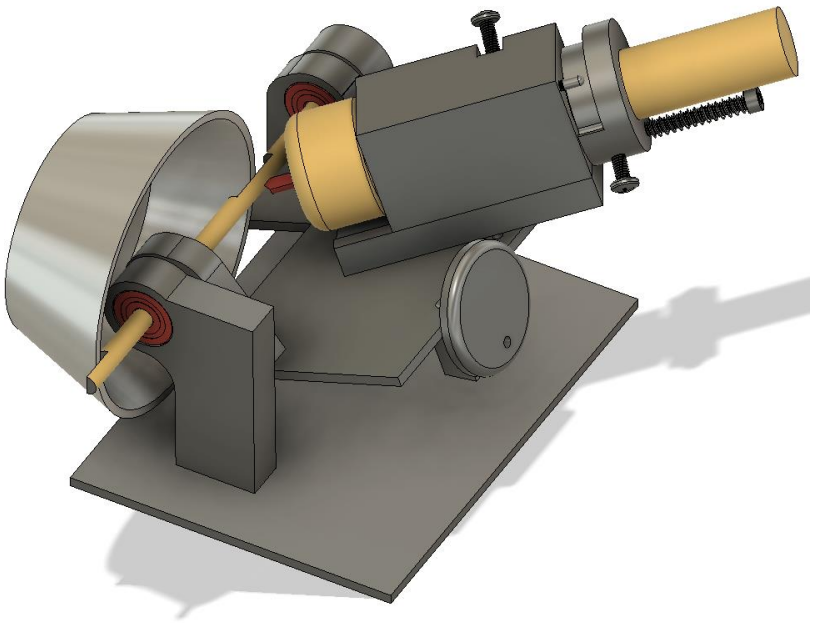

With the collet holder assembly in place on the trunnion table in the 118 degree (middle) location, the motor and grinding cone can now be offered against the test rod (shown in gold above). The rod and the motor should be mutually shuffled so the cone grinding faces sit in the half diameter sections. There is a further aspect to consider. The traverse table needs to sit such that the collet centre line will sweep across the grinding face. The left hand support arm and post must sit

comfortably within the limits of the grinding wheel cone and not foul the cone at the extreme of the left hand traverse.

Next the short 6mm section test rod with its half diameter end section is fitted into a collet chuck in the collet block. It needs to protrude far enough to pass through the trunnion centre of axis. The long test rod is rotated such that the flat section of the short test rod will align and then slid over the half diameter section of the axial rod. The chuck will need sliding inwards and rotated for this. This checks the alignment of the centre line of the collet and centre line of the trunnion. The spacer block fastened to the bottom of the collet block will need adjusting in height to correct any mismatch in height between the flat sections of the two rods. For me, having better understood the use of the long rod, the subsequent use of the short rod was more obvious. It was comforting that my 3D prints of the collet chuck holder and spacer block matched the centre line height setting without further adjustment.

All other aspects of the set up are clearly described in John's write up. Once the assembly looks and measures to be correct it can be fully fixed in place.

It is now important to make a test grind as detailed in John's notes using a 0.1" or 1/8" or 3mm rod. The results from this will indicate any final fine adjustments that might be needed.

Once I got the test piece to grind correctly as John suggests, I moved on to grinding a drill bit. When conversion grinding a conventional drill bit to a four facet profile there will be a need to remove a significant amount of metal from the drill tip. This will affect the horizontal setting of the flutes and affect the subsequent four facet sharpen. It is important therefore that after an initial conversion grind to the secondary facet angle that you check and reset the horizontal orientation of the drill bit flutes. You can then cleanly undertake the four facet grind from scratch. At this point you will realise the joy of being able to lift off the chuck holder to inspect progress.

Completed Assembly

Here is a Fusion model (no thrust bearing) and pictures of the actual build are on the next page.

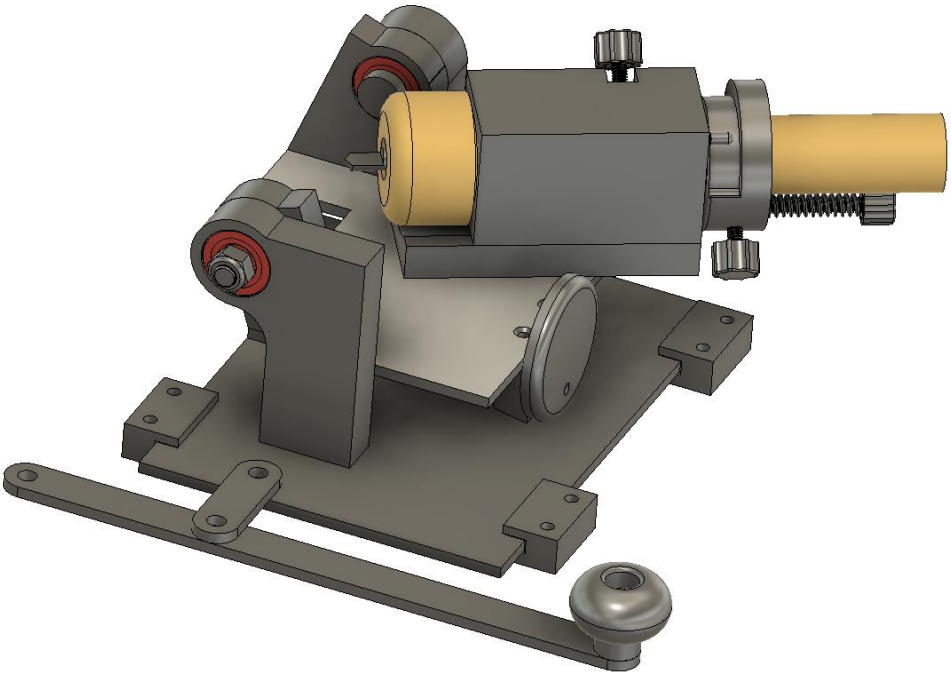

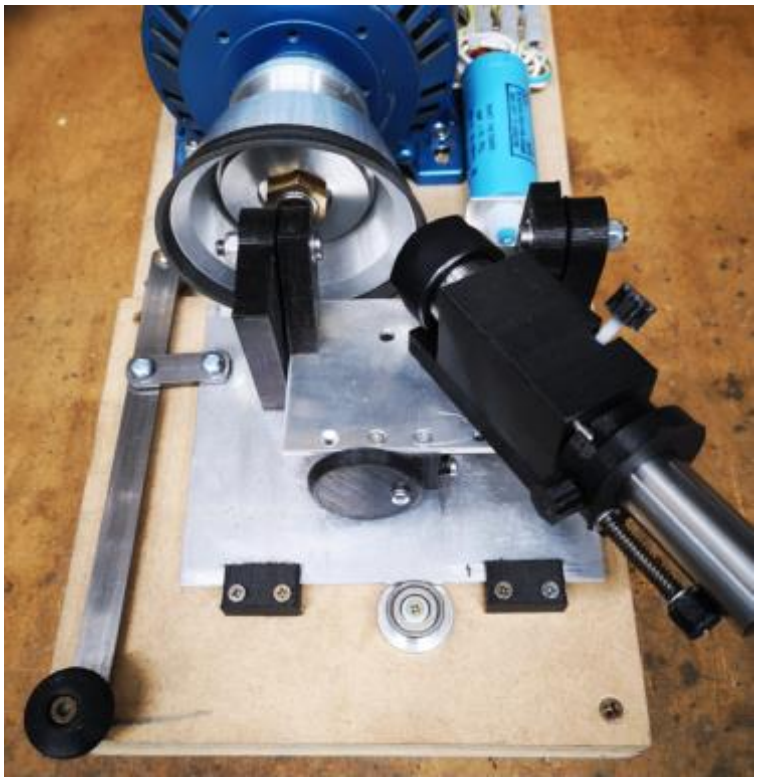

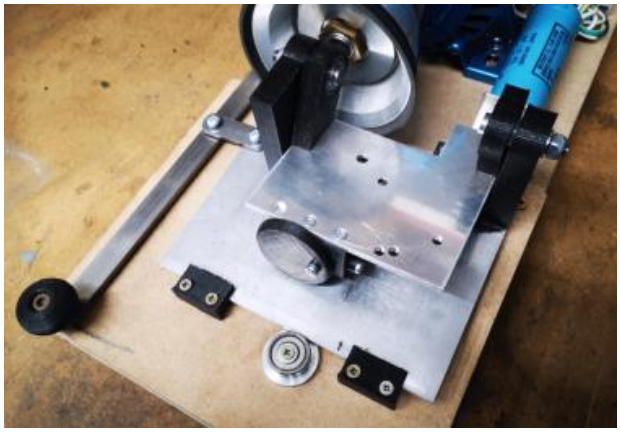

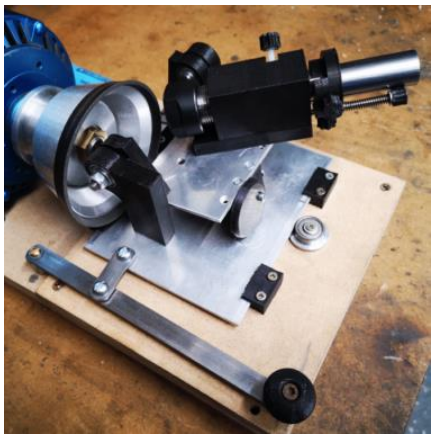

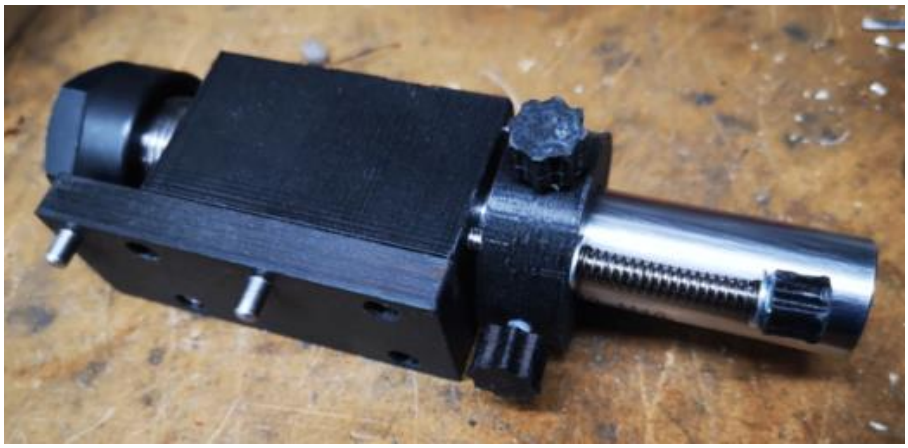

Note the thrust bearing that John recommends to fit to add push pressure to the traverse plate edge. This helps eliminate movement away from the grind wheel face.

All the clamping/grub screws on the collet holder block and the register ring were made from 3D printed knobs with a M4 nylon thread glued into a M4 nut embedded into the printed knob. This is a technique I regularly use for custom knob construction and features on my blog. The register ring has a spring loaded grinding depth adjuster screw. This is made in a similar fashion to the gripping knobs but with M4 threaded steel stock rather than nylon thread. For reference a M4 coarse thread (0.7mm pitch) has a feed rate of 27.5 thou per revolution which in practice seems more than adequate.

The two register pins on the base of the collet block spacer are clearly seen. The mating holes for 60, 118 and 135 degree point angles are visible in the lower left image. (There is a clanger hole in the middle of the trunnion plate and a further one where I moved the facet block mounting - these should be ignored). Note how the left hand support arm and hinge arm assembly sit inside the grind wheel cone.

Upgrades from PLA to Metal

As mentioned earlier on in this write up, the aim was to produce a quick mock-up of the grinder using 3D printed parts with a view to replacing these downstream with metal equivalents. In practice I may not need to do this.

The primary facet setting disc is the most likely 3D component I might replace with metal so I can easily add a set of visible calibration marks. (A digital inclinometer is useful for initially calibrating the trunnion plate angle). I will probably make a few of secondary facet drop down triangles to allow investigation of the impact of different secondary angles. These will be fine in PLA.

I don't believe it will be necessary to replace the support arms as these seem very robust and rigid. The collet chuck holder and base plate also seem to be fine in PLA. The index ring is perhaps a candidate for upgrade once the printed threads wear but then I can simply print another one.

The traverse slides seem to be durable as do the various knobs. These are simple 5 minute prints if spares are needed.

There are a couple of accessory 3D print STEP files in the ZIP folder. The first is a small U shaped spacer to ensure that there is enough movement on the depth setting screw before tightening the drill bit protrusion length. This drops in between the collet tightening nut and the collet chuck block. The second print is a simple ER20 spanner which is more that strong enough to tighten the collet nut.

Conclusion

The complete grinding jig works very well and I would recommend it as a project and as an addition to workshop assets. The assembly is small, compact and relatively easy to setup. The compact size makes it immediately attractive to lift onto the bench to quickly sharpen drills. This was the one disadvantage of my Quorn. Being able to lift off the collet block assembly to inspect the grinding process is invaluable. This is not possible on the Quorn and leads to some interesting head and neck contortions …

Once the grinder is completed it does not take long to familiarise yourself with the technique and what adjustments affect what features. This having been achieved it is a simple yet elegant method of four facet sharpening.

Documents

I have created a ZIP file for download from my blog which contains the two Fusion models (collet assembly and main assembly), PDF drawings of the metal parts and STEP files of the 3D printed parts.

The Fusion files will allow Fusion users to tweak aspects of the design. The most likely edits will be for the size of the cavity to accommodate the ball races and the bore for the collet chuck shank diameter.

Update

Rather than modify the whole document here are details of a useful modification to the design. The main issue that I experienced as did others was regarding the smoothness of the 3D print on the bore of the collet chuck shank. This meant the shank did not advance smoothly back and forth. Likewise the action of the advancing screw was not consistent being dependent on the quality of the surface of the back of the chuck holding block.

Clearly the block could be made of metal and this would overcome this problem but this would involve four jaw lathe work and that is always a pain. My solution is to sleeve the block with a metal tubular component and to have a flange on this that the advancing screw bears against. This solves both problems and still allows a 3D print for the body of the chuck holder.

A revised model of the chuck holder needs to be printed which has a larger diameter through bore. The new version STEP for this is in the ZIP file as is a PDF drawing of the sleeve. Here is a Fusion view of the result.

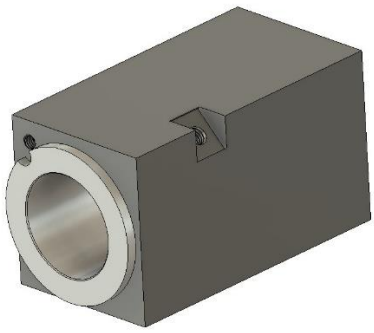

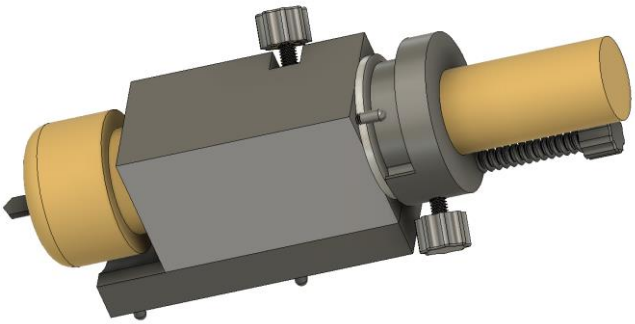

I have to say that this modification makes the grinding process much more repeatable and is a recommended modification.