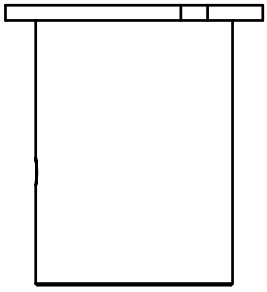

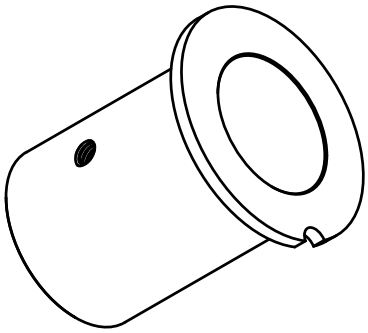

The length can longer subject to the collet holder geometry

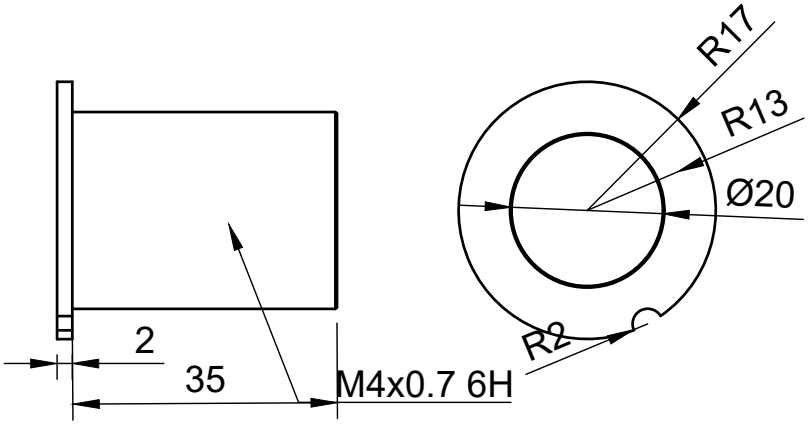

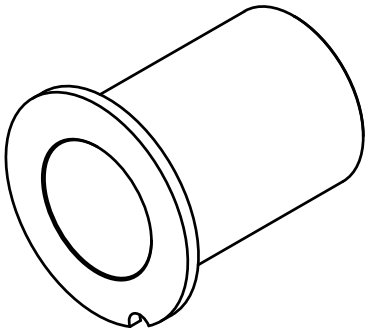

I used 35mm aluminium stock that was to hand.

1 - Turn the 26mm section to be a tight fit into the new version of the 3D printed block.
2 - Drill throught with a large drill (say 12/13mm).
3 - Part off leaving the 2mm flange.
4 - Reverse in the chuck and bore the centre hole to be a sliding fit on the collet holder shank.
5 - Clean up all edges.
6 - Slide into the 3D block print and mark through the locking screw hole and mark the position of the indexing pin on the flange.
7 - Remove the sleeve, drill and tap the locking screw hole M4.
8 - Hand file the index pin notch.

WOODY'S WW WORKSHOP

www.altrish.co.uk

Project: Four Facet Sharpener ER20 Metric				
Component: Collet Block Sleeve				
Scale: 1:1	DWG No.		Material: Aluminium	
Created by: A.W.	Created Date	Rev.	Date of issue	Sheet: 1/1